Sequence Diagram

Dr. Adnan Arefeen

Dept. of ECE
North South University

Sequence Diagram

1. An **interaction** diagram between objects.
2. Clearly shows sequence or time ordering of messages.

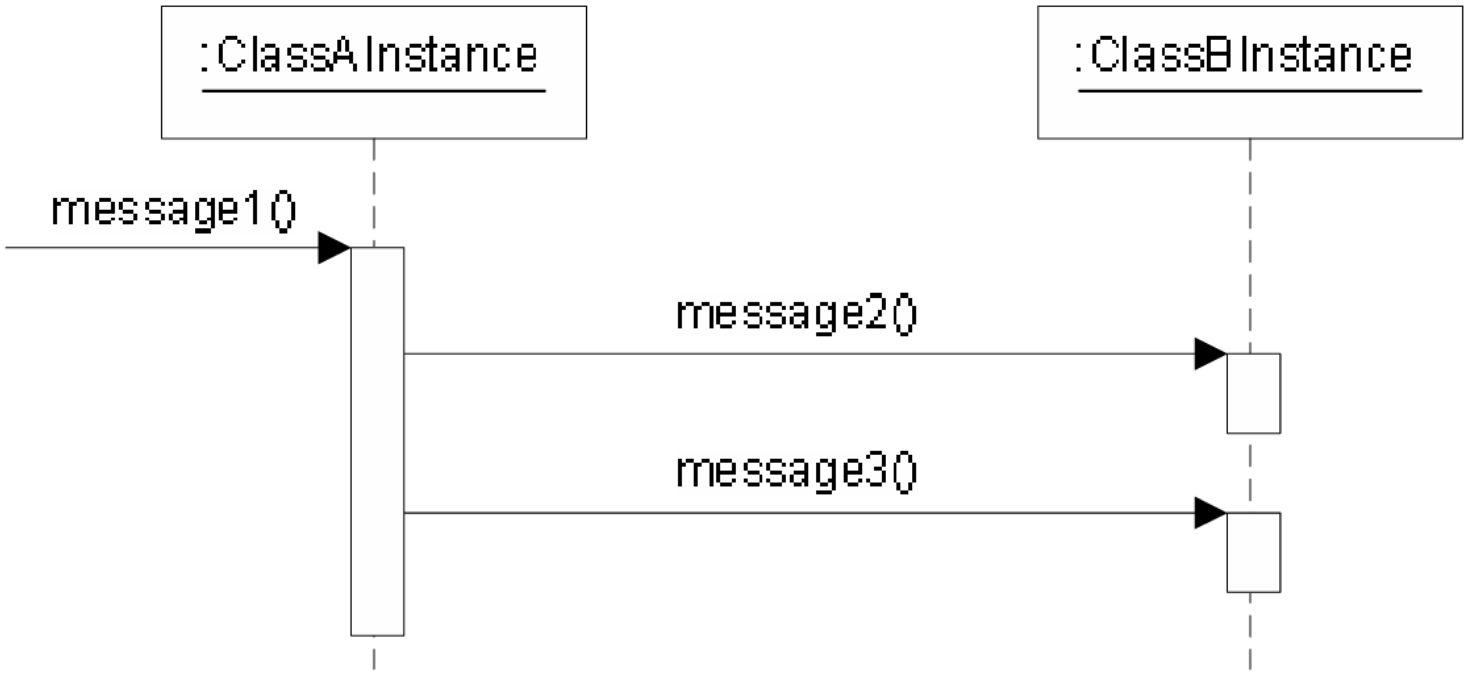

Notations

1. An instance uses the same graphic symbol as the type, but the designator string is <u>underlined</u>.

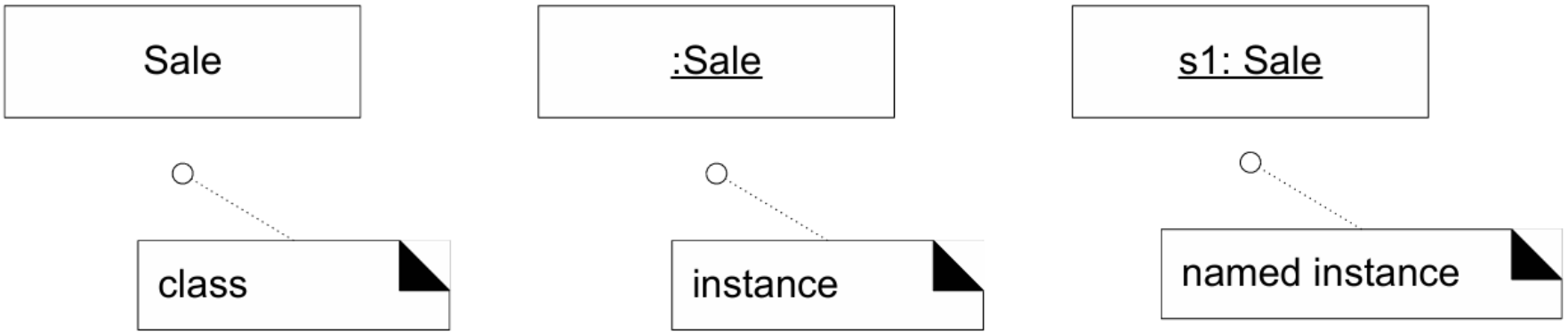

Messages and Focus of control

- Each message between objects is represented with a message expression on an arrowed line between the objects.
- Sequence diagrams also shows the focus of control using an activation box.

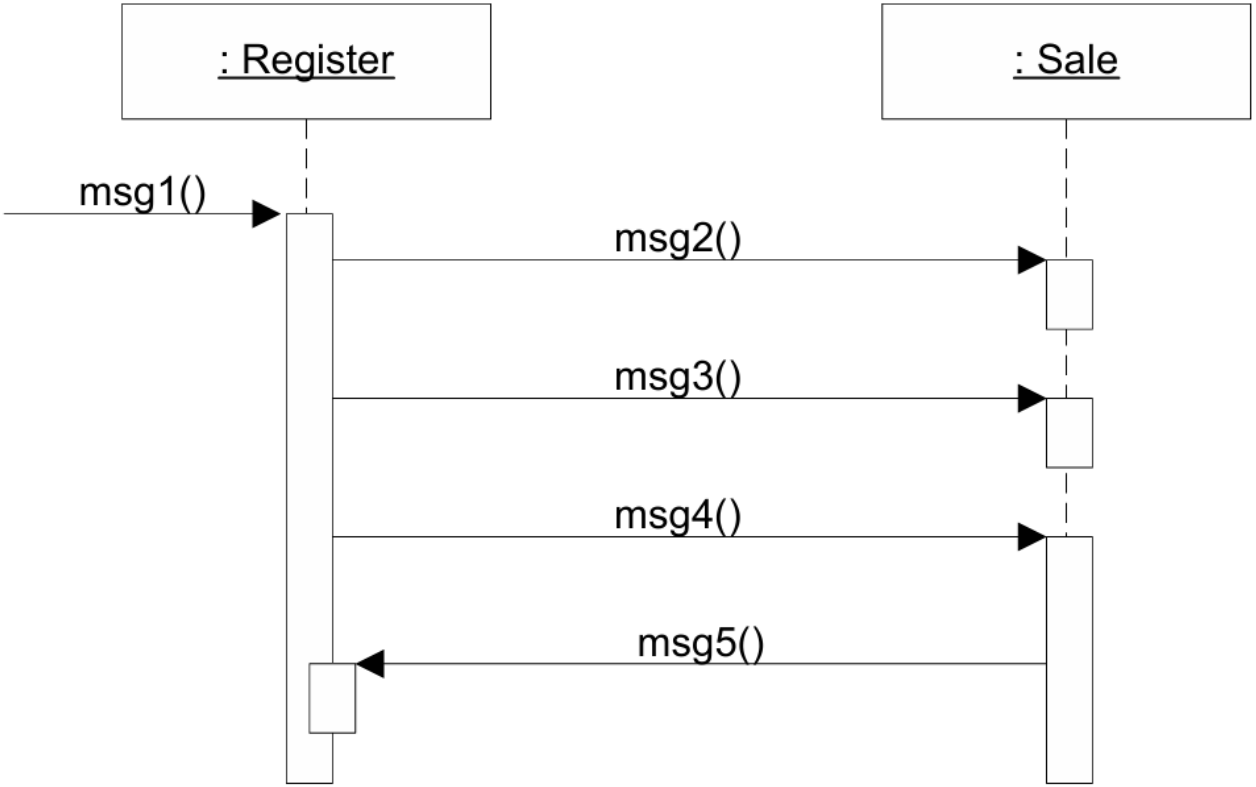

Message to "Self" or "this"

1. A message can be illustrated as being sent from an object to itself by using a nested activation box.

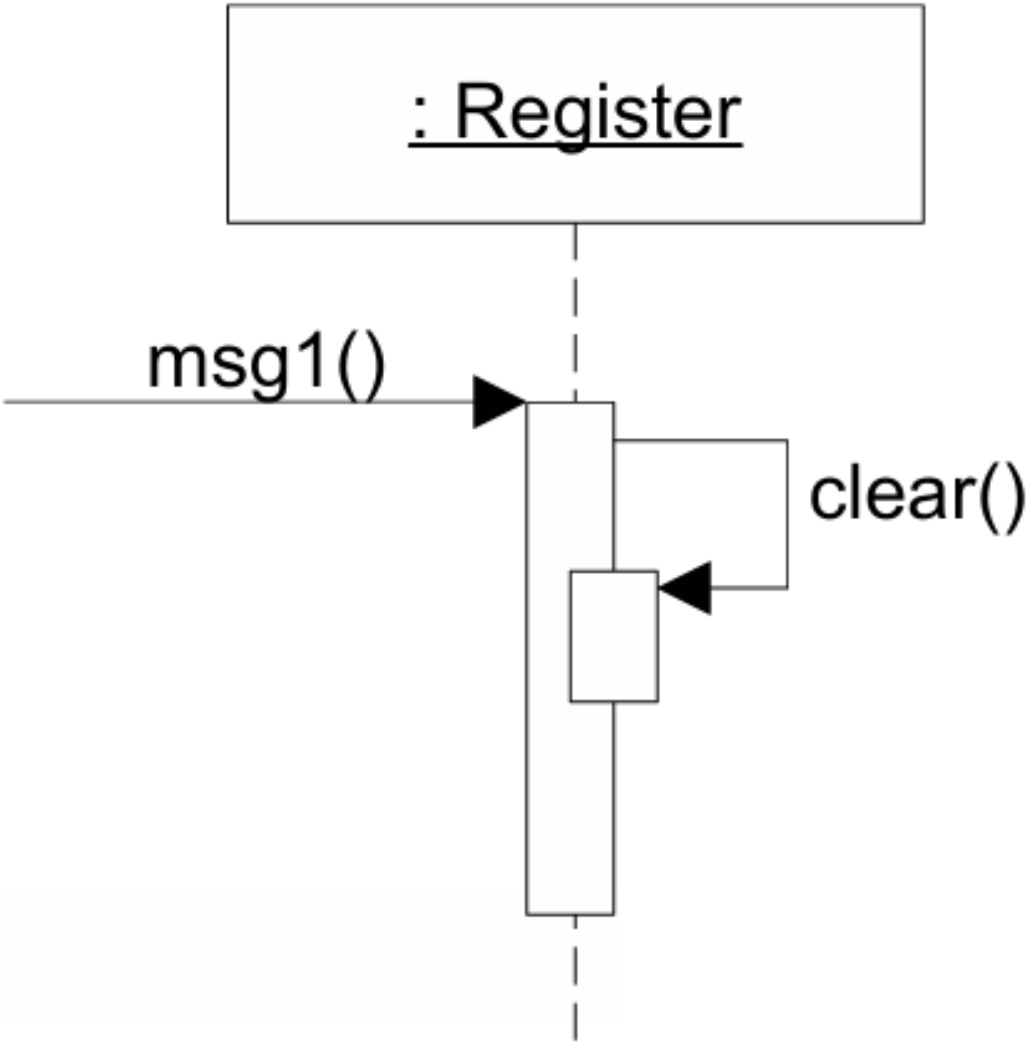

Creation of Instances

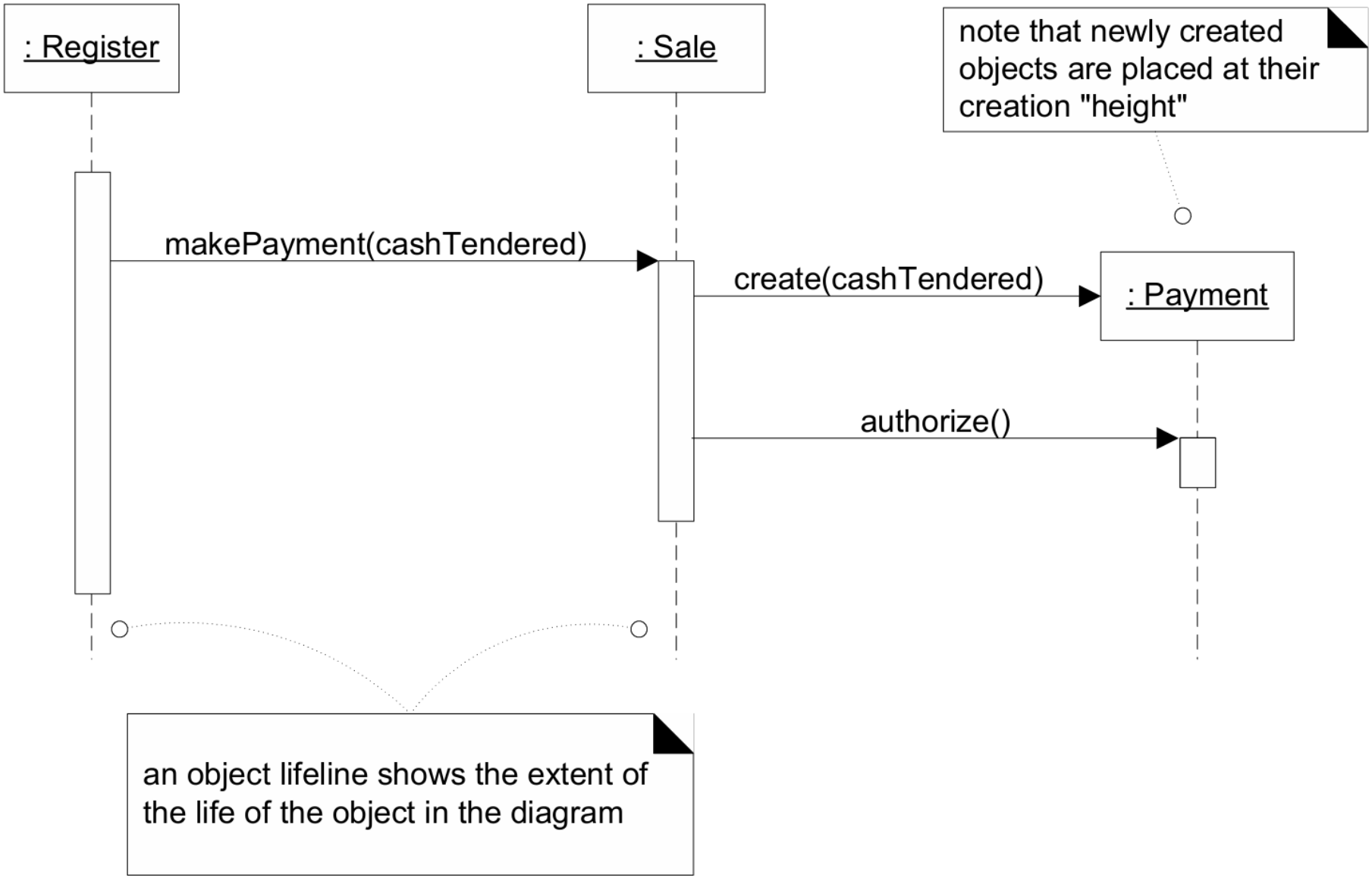

Object lifeline and destruction

1. Object lifelines the vertical dashed lines underneath the objects.
2. UML lifeline notation provides a way to express this destruction

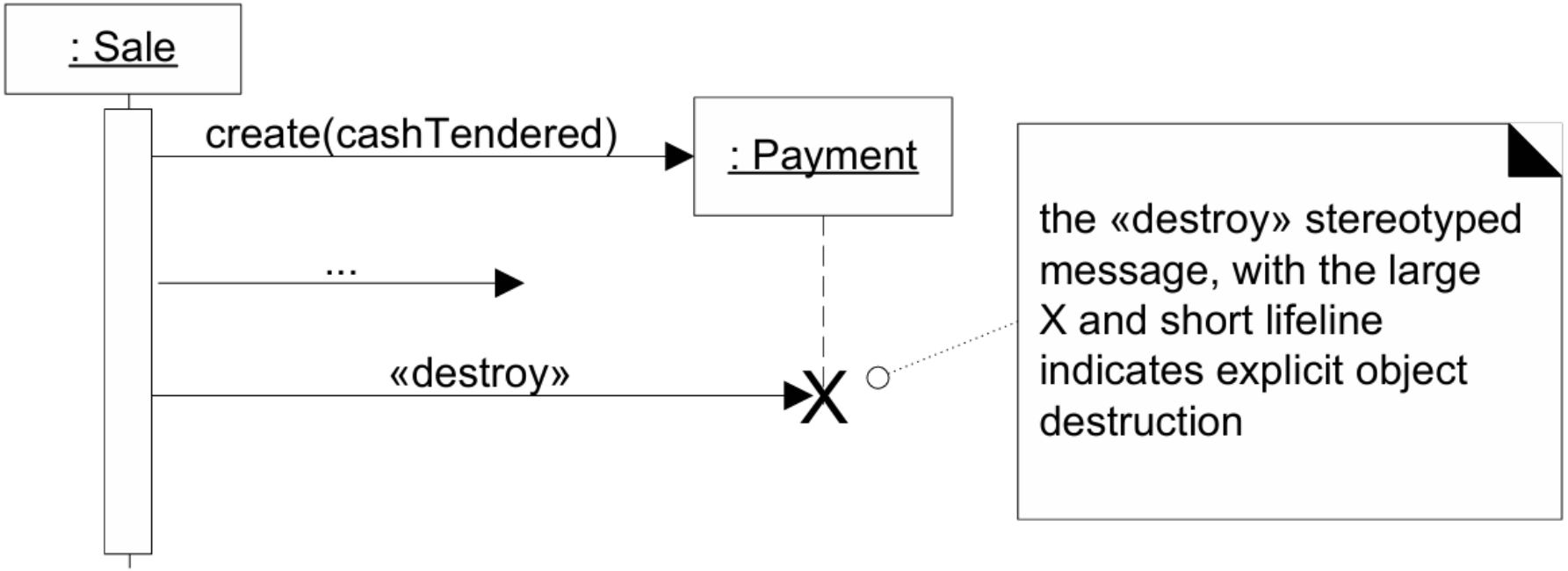

Conditional Messages

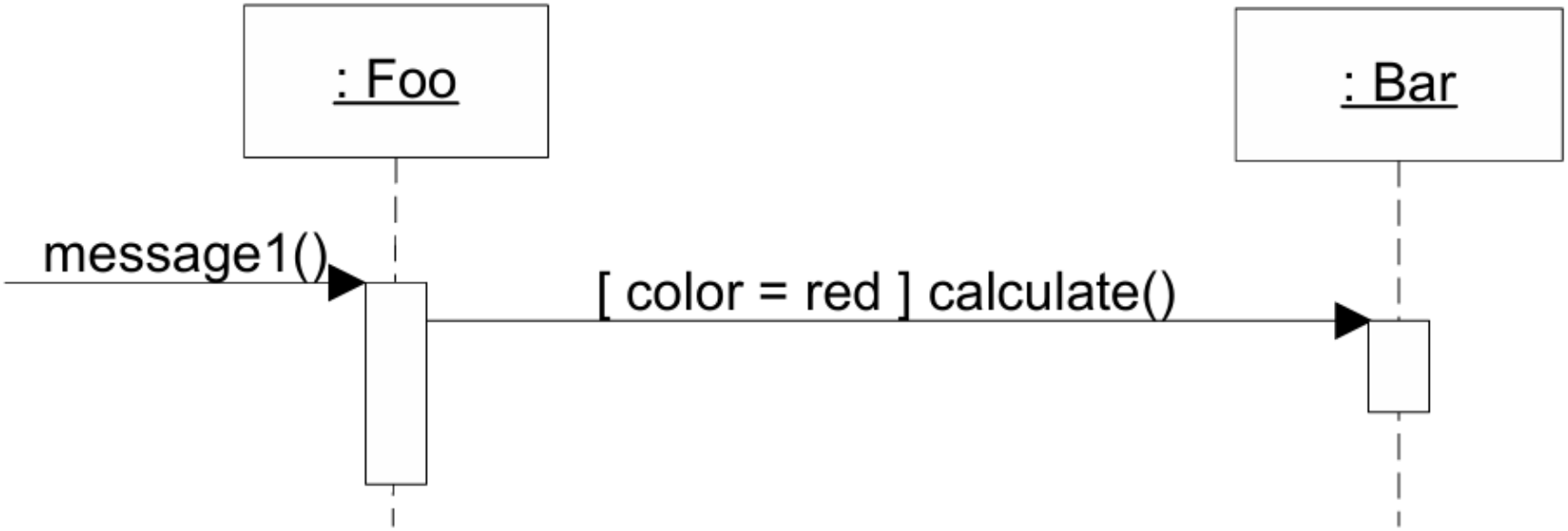

Mutually-Exclusive Conditional Messages

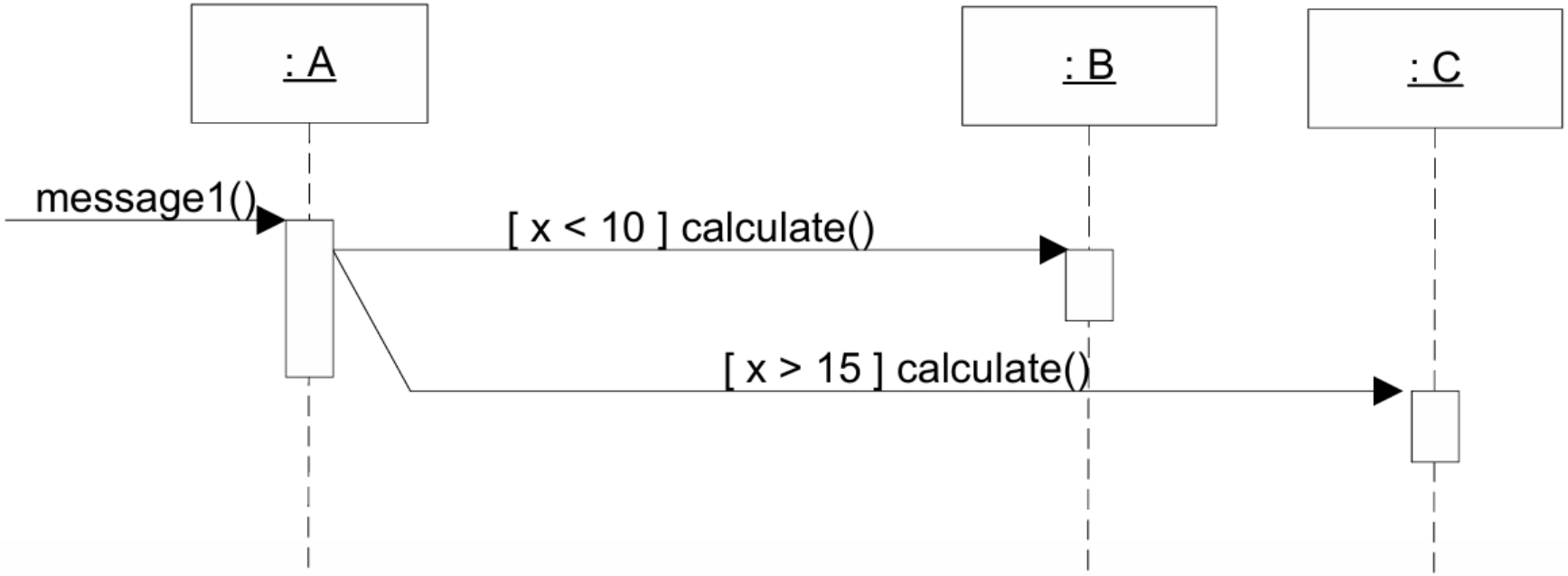

Iteration for a single message

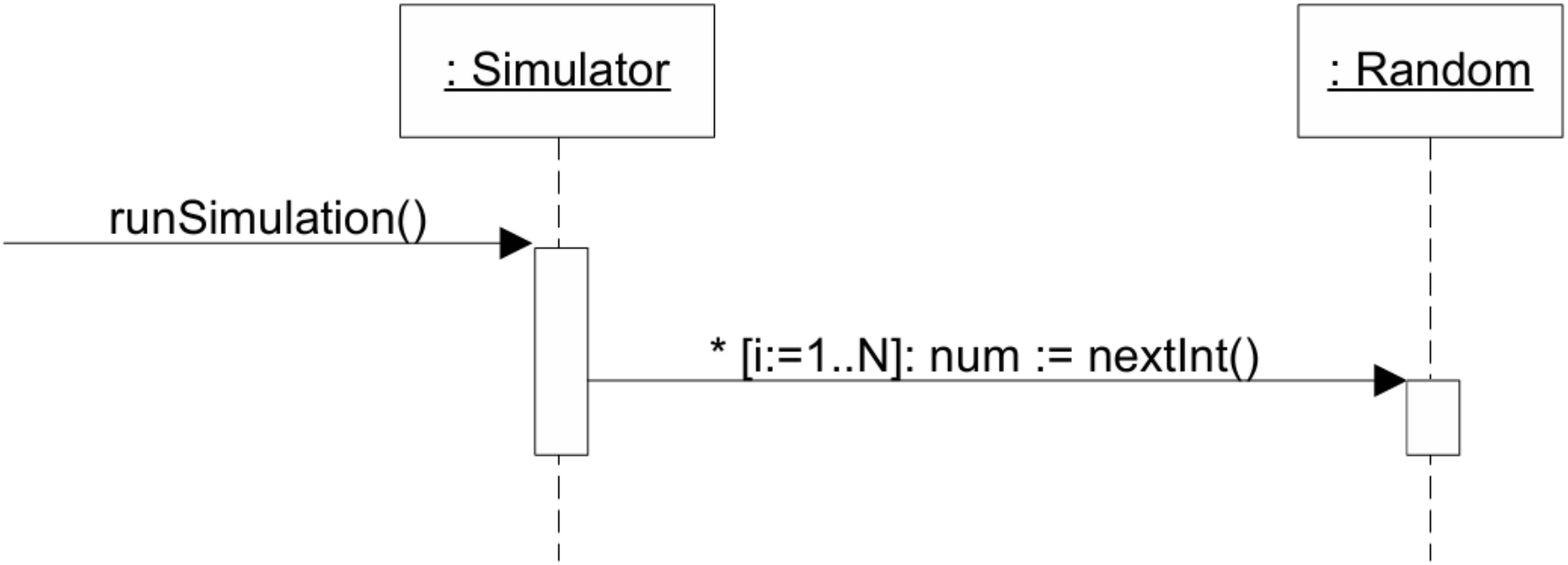

Iteration for a series of messages

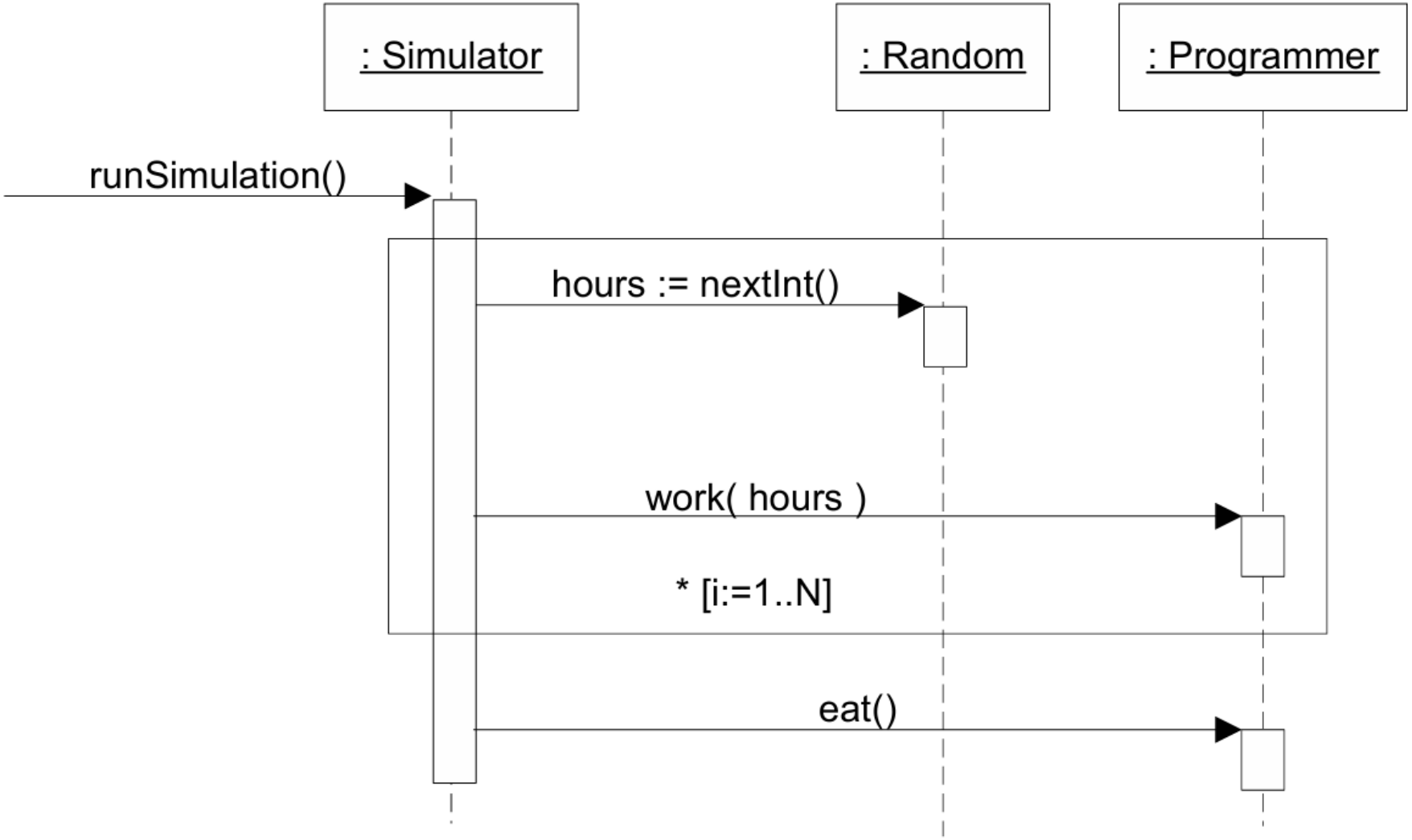

References

- Larman, Craig. *Applying UML and Patterns: An Introduction to Object-Oriented Analysis and Design and Iterative Development*. 3rd Edition, Pearson, 2004.
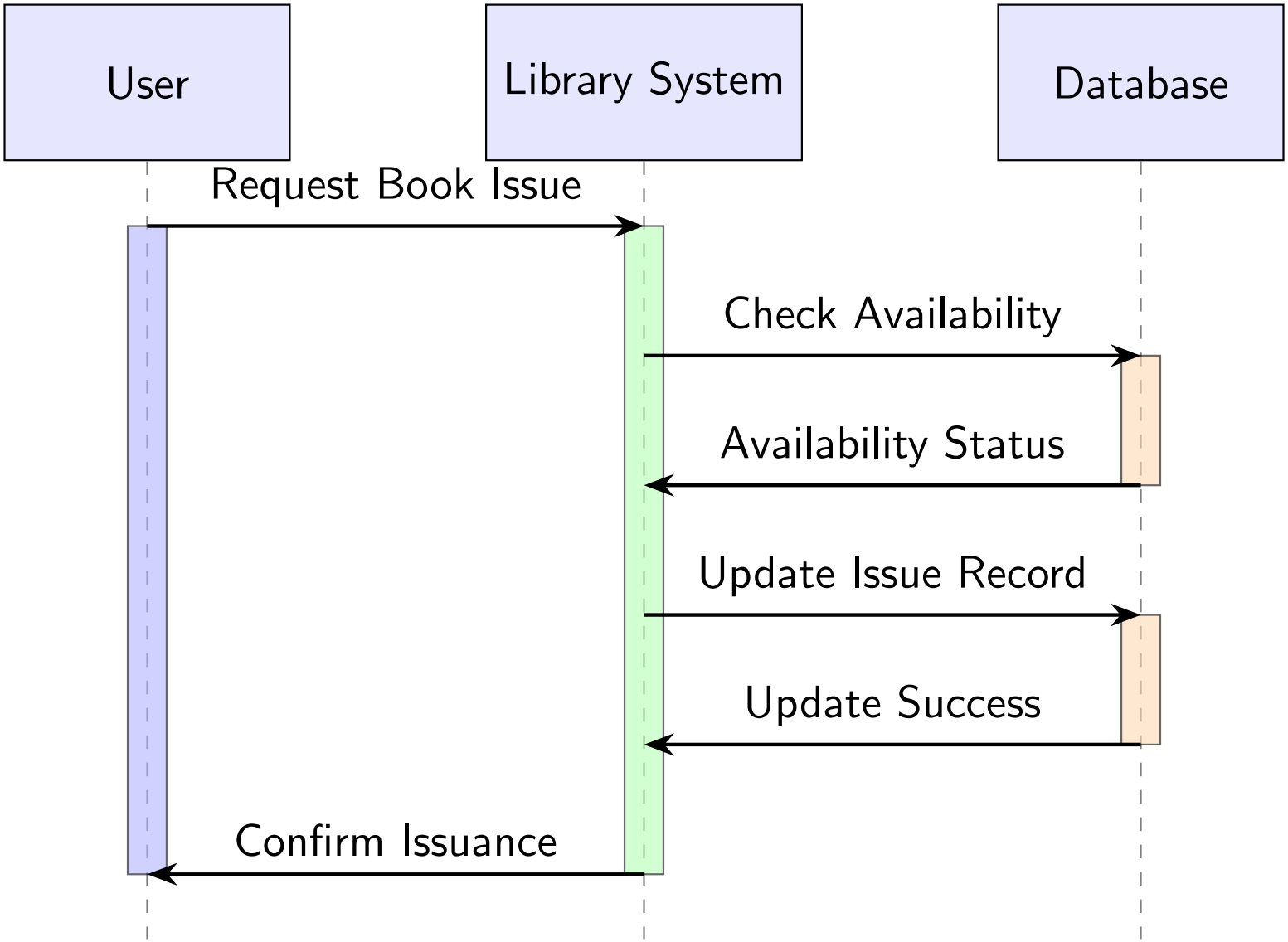
Book Issuance Sequence Diagram